High Productivity Cooking Touchline tilting pressure braising pan, gas (98,948 BTU), 45 gal (170 lt)

ITEM #

MODEL #

NAME #

SIS #

AIA #



587028 (PUET17GCWU)	Touchline Tilting Pressure Braising Pan, gas, 45 gallon (170 Lt) capacity, stainless steel construction, safety thermostat, motor assisted tilt, 98,948 BTU

Short Form Specification

Item No.

AISI 304 stainless steel construction. GN compliant pan size; 0.7" (18mm) thick pan bottom 0.6" (15mm) mild steel and 0.1" (3mm) AISI 316 stainless steel. Insulated and counterbalanced lid. Motorized tilting with variable speed control. Pan can be tilted beyond 90° to completely empty the food. A precise, electronic control of pan bottom temperature ensures fast reaction and exact adherence to preselected cooking temperatures between 122 and 482°F (50° and 250°C). It can be used for poaching or steaming (with the lid open); simmering and boiling (with open or closed lid); pressure cooking of multiple produces possible thanks to the use of suspended GN 1/1 containers. TOUCH control panel. SOFT function. PRESSURE function. IPX6 water resistant. Configuration: Free-standing or Standing against a wall. Installation options (not included): floor mounted on 8" (200mm) high feet or a plinth which can be either steel or masonry construction.

Main Features

- Multifunctional cooking appliance used for roasting, pot-roasting, braising, simmering, boiling, pressure cooking and steaming.
- Pan size is GN compliant.
- Temperature sensors provides efficient temperature control: the power is supplied as and when required to keep the set temperature value without exceeding it.
- Easy to clean cooking surface due to large-radius edges and corners.
- Cooking with a working pressure of 6.5psi (0.45 bar) reduces cooking times.
- Optimum heat distribution in the food provides best cooking results in terms of taste, color and consistency and in terms of vitamin preserving.
- Safety mechanism prevents lid from opening, even in case of voluntary attempt, when cooking under pressure.
- Overnight cooking: saving electricity and time.
- Safety valve on the lid avoids overpressure in the food compartment.
- IPX6 water resistant.
- Motorized, variable pan tilting with "SOFT STOP". Tilting and pouring speeds can be precisely adjusted. Pan can be tilted over 90° to facilitate pouring and cleaning operations.
- "Pressure function": once the pressure lid is locked, the system automatically regulates itself.
- Built in temperature sensor to precisely control the cooking process.
- No overshooting of cooking temperatures, fast reaction.
- USB connection to easily update the software, upload/ download recipes and download HACCP data.

Construction

- External panelling and internal frame made of 1.4301 (AISI 304) stainless steel.
- Multipurpose non-stick cooking surface in 0.75" (18 mm) thick compound: 0.1" (3 mm) shot-blasted 1.4404 (AISI 316L) stainless steel surface, seamlessly welded to the mild steel bottom.
- Double-lined insulated lid in 1.4301 (AISI 304) stainless steel mounted on the cross beam of the unit, counterbalanced by a hinge that remains open in all positions.
- Gas appliance has robust multiple burners with electronic ignition and monitoring for a safer operation. Operation with natural gas and LPG (on request).
- Water mixing tap is available as optional accessory to make water filling and pan cleaning easier.
- Pressure lid fitted with a proven fast-acting lock which is simple and safe in operation.
- Heatproof handle with non-slip surface.
- Front-mounted inclined led "TOUCH" control panel with recessed deep drawn casing, features self-explanatory display functions which guide operator throughout the cooking process: simultaneous display of actual and set temperature as well as set cooking time and remaining

APPROVAL:

Electrolux Professional, Inc.
www.electroluxprofessional.com
4003 Collins Lane Louisville, KY 40245 USA - fax number: 706-447-6228

Electrolux PROFESSIONAL
Touchline tilting pressure braising pan, gas (98,948 BTU), 45 gal (170 lt)
High Productivity Cooking

cooking time; real time clock; "SOFT" control for gentle heating up for delicate food; 9 power simmering levels from gentle to heavy boiling; timer for deferred start; error display for quick trouble-shooting.

- Minimised presence of narrow gaps for easier cleaning of the sides to meet the highest hygiene standards.
- "Boiling" or "Braising" mode functions.
- Can be prearranged for energy optimisation or external surveillance systems (optional).
- 98% recyclable by weight; packaging material free of toxic substances.
- Model equipped with TDO valve available as special execution (S/code request)
- [NOT TRANSLATED]
- [NOT TRANSLATED]
- [NOT TRANSLATED]

User Interface & Data Management

- Connectivity ready for real time access to connected appliances from remote and data monitoring (requires optional accessory - contact the Company for more details).

Sustainability

- High-quality thermal insulation of the pan saves energy and keeps operating ambient temperature low.

Optional Accessories

• Suspension frame for Pressurized Tilting Braising Pans - 2 needed for 24 gallon units (587021, 587027) - 3 needed for 45 gallon units (587025, 587028)	PNC 910191	❑
• Base plate, for pressure braising pans and non-pressure braising pans, half size - 2 needed for 24 gallon units (587031, 587037, 587021, 587027) - 3 needed for 45 gallon units (587035, 587039, 587025, 587028)	PNC 910201	❑
• Perforated container with handles, height 4" (102mm)	PNC 910211	❑
• Perforated container with handles, height 6" (152mm)	PNC 910212	❑
• Perforated container with handles, height 8" (203mm)	PNC 911673	❑
• Left cover plate and mixing faucet for kettle (587040), and all braising pans (587037, 587039, 587031, 587035, 587027, 587028, 587021, and 587025)	PNC 911819	❑
• Spray gun for tilting units, height 27-1/2" (698.5mm) - factory fitted	PNC 912776	❑
• SCRAPER WITHOUT HANDLE (PFEX/PUEX)	PNC 913431	❑
• - NOT TRANSLATED -	PNC 913432	❑
• 4 flanged feet, 2", for prothermetic units (kettles, braising pans & pressure braising pans)	PNC 913438	❑
• - NOT TRANSLATED -	PNC 913574	❑
• - NOT TRANSLATED -	PNC 913577	❑
• Spray gun kit for free-standing ProThermetic Tilting units H=700 - US - Field Mounted	PNC 913579	❑

High Productivity Cooking
Touchline tilting pressure braising pan, gas (98,948 BTU), 45 gal (170 lt)

Front

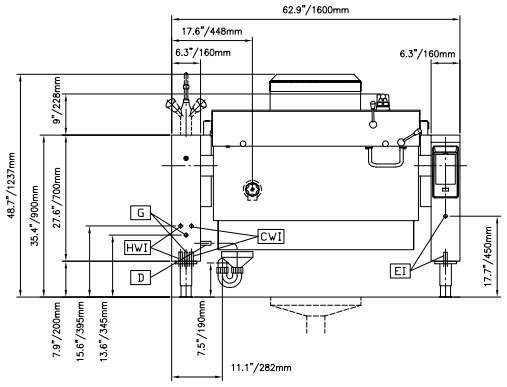

Side

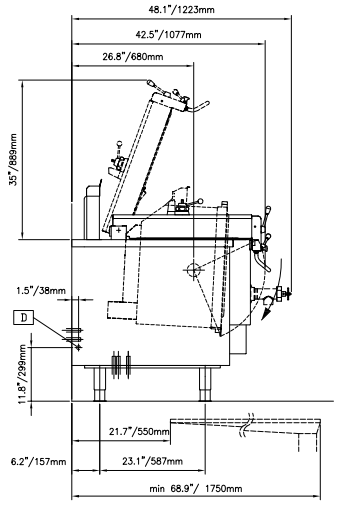

CWI1 = Cold Water inlet

G = Gas connection

D = Drain

EI = Electrical connection

Top

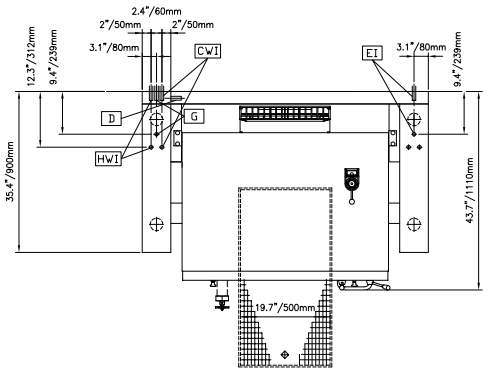

Electric

Supply voltage:	120 V/1 ph/60 Hz
Total Watts:	0.25 kW

Gas

Gas Power:	98948 Btu/hr (29 kW)
Standard gas delivery:	Natural Gas
Gas Type Option:	Propane
Gas Inlet:	3/4"

Water:

Pressure:	29-87 psi (2-6 bar)
Drain line size:	1/2"
Incoming Cold/hot Water line size:	1/2"

Installation:

Type of installation:	FS on concrete base;FS on feet;On base;Standing against wall

Key Information:

Working Temperature MIN:	122 °F (50 °C)
Working Temperature MAX:	482 °F (250 °C)
External dimensions, Width:	63 " (1600 mm)
External dimensions, Depth:	35 7/16" (900 mm)
External dimensions, Height:	27 9/16" (700 mm)
Net weight:	750 lbs (340 kg)
Shipping width:	67 5/16" (1710 mm)
Shipping depth:	49 5/8" (1260 mm)
Shipping height:	58 1/4" (1480 mm)
Shipping weight:	1283 lbs (582 kg)
Shipping volume:	112.6 ft³ (3.19 m³)
Configuration:	Rectangular;Tilting
Heating type:	Direct
Tilting mechanism:	Automatic

The company reserves the right to make modifications to the products without prior notice. All information correct at time of printing.

2026.11.23